GUARD RAIL LENGTHS	OAL	HDWRE LIST
	35"/UNDER	#102
	36"–72"	#101
	73"–96"	#100
	97"–120"	#99

DWG #	HARDWARE LIST #
B27318	99/100/101/102
B27364	99/100/101/102
B27341	99/100/101/102
B27317	99/100/101/102
B27308	99/100/101/102
B27356	108
B27319	103
B27360	103
B27365	103
B27340	103

ITEM	QTY	DESCRIPTION	DRAWING
1	1PR	6" HIGH GUARD RAIL	B27318–00–000
		12" HIGH GUARD RAIL	B27364–00–000
		18" HIGH GUARD RAIL	B27341–00–000
		24" HIGH GUARD RAIL	B27317–00–000
		6" HIGH 30D FLARED GUARD RAIL	B27308–00–000
2	2	18" HIGH STIFFENER ANGLE	B27356–00–000
		24" HIGH STIFFENER ANGLE	B27319–00–000
3	4	6" HIGH GUARD RAIL BUTT CPLG	B27360–00–000
		12" HIGH GUARD RAIL BUTT CPLG	B27365–00–000
		18" HIGH GUARD RAIL BUTT CPLG	B27340–00–000
4	4	0.3125" X 0.75" LG TRUSS BOLT	23–309
6	4	0.3125" FLANGE NUT	23–298
7	4	0.375" X 0.75"LG HHCS	23–400
8	4	0.375" FLANGE NUT	23–470

NOTE:

HARDWARE QTY'S ARE PER 2'–0" OF CONVEYOR LENGTH

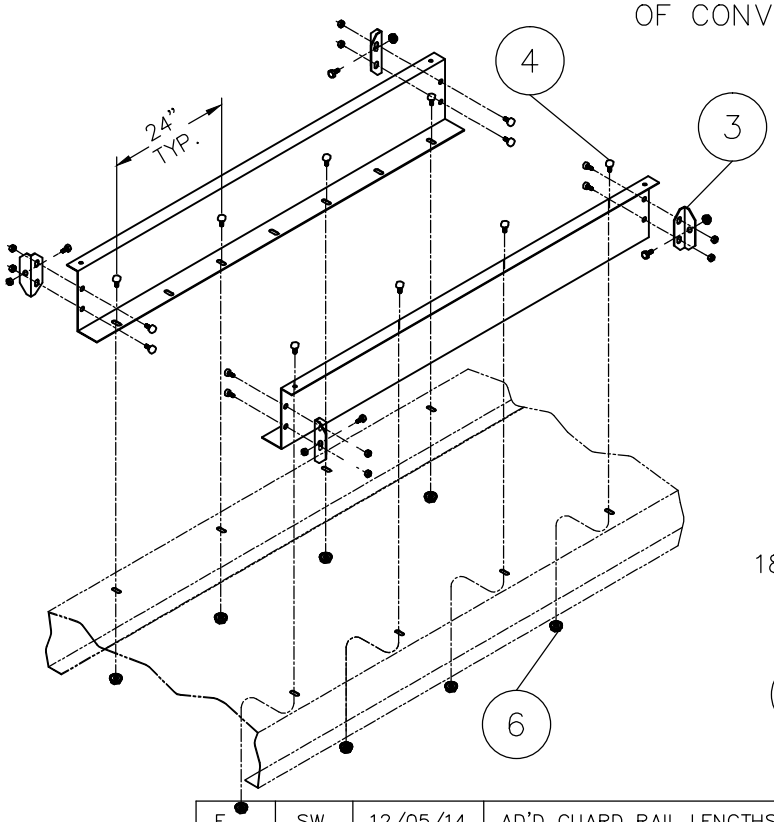

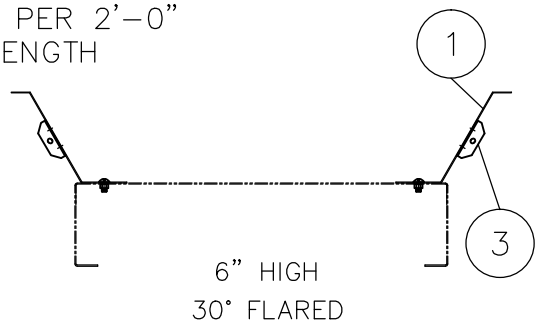

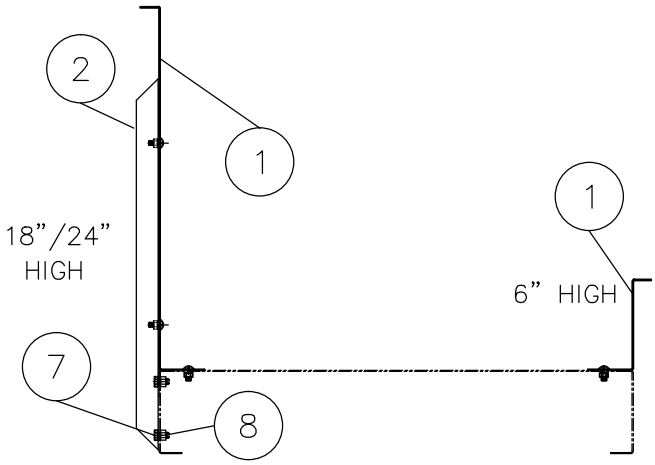

REV.	INT.	DATE	CHANGES	ECO#
E	SW	12/05/14	AD'D GUARD RAIL LENGTHS CHART	
C	CLR	09/28/05	AD'D CHART FOR HARDWARE LIST	8417
B	CLR	09/07/05	AD'D N/A ITEM #1	8406
A	GE	10/02/02	AD'D BUTT CPLGS: RELEASED	7935

FO No.

DIST.

USER

TITLE

SBT GUARD RAIL INSTALLATION 24–849

AUTOMATED CONVEYOR SYSTEMS, INC.

WEST MEMPHIS, ARKANSAS

TOLERANCES: DECIMAL ±.03125"

DESIGNED BY:

CHECKED BY: DATE

DRAWN BY: C. DOTY

APPROVED BY: DATE

DATE 1/14/00

SCALE

REV. E

NEXT ASSEMBLY ITEM # 1

DRAWING NUMBER FAD–120